VOICE ACOUSTIC
professional german loudspeaker systems

MANUAL
LA-STICK SERIES

Line-Array Stick



QUALITY MADE IN GERMANY

Thank you very much,
for purchasing a Voice-Acoustic product.
Since 2006 we have been developing our
products in the firm belief that details matter.
May we wish you a lot of pleasure with this product.

Herzlichen Dank,
dass Sie ein Voice-Acoustic Produkt gekauft haben.
Seit dem Jahr 2006 entwickeln wir unsere Produkte
in der Überzeugung, dass es auf die Details ankommt.
Wir wünschen Ihnen viel Freude mit diesem Produkt.

Muchas gracias
por haber comprado un producto de Voice-Acoustic.
Desdel año 2006 estamos desarrollando nuestros productos
estando convencidos, que son los detalles que cuentan.
Le(s) deseamos mucha alegría usando este producto.

Merci beaucoup
d´avoir acheté un produit Voice-Acoustic.
Depuis 2006, nous développons des produits
avec la ferme conviction que les détails comptent.
Nous vous souhaitons beaucoup de plaisir à utiliser ce produit.

VOICE ACOUSTIC
professional german loudspeaker systems

Contents

Introduction

General Safety Instructions 4
Care 4
Transport and storage 4
Warranty 4
Components 5
Technical data 6
Connections 6
Setup 7
Connecting cables 7
Operation 7

Working with LA-Stick

Adjustment of the high frequency range to the array length 8
Positioning LA-Stick 8x4 and LA-Stick 12x4 9
Mounting the spindle mechanics 10
Separation of two LA-Sticks 10
Forming a Array 11
Adjust the angle with the spindle mechanics 11
Mounting the tilt adapter 11
Mounting the U-bracket 11
LA-Stick in flight operation 12
Assembly and alignment of the flight mechanics 12
Safety points in flight operations 12
Flight operation at truss clamp 12
Mounting the tiltable stand adapter 13
Mounting the tilting and swivelling wall bracket 13
Mounting the ceiling bracket 13
Mounting the wall bracket 13
Overview Accessories 14

Manufacturer's declaration

Imprint 15

Introduction

General Safety Instructions
Loudspeakers produce a static magnetic field even if they are not connected or are not in use. Therefore make sure when erecting and transporting loudspeakers that they are nowhere near equipment and objects which may be impaired or damaged by an external magnetic field. Persons with cardiac pacemakers must maintain a safe distance.

The minimum recommended safety clearance is 1 m.

Never stand in the immediate vicinity of loudspeakers driven at a high level. Professional loudspeaker systems are capable of causing a sound pressure level detrimental to human health. Seemingly non-critical sound levels (from approx. 90 dB SPL) can cause hearing damage if people are exposed to it over a long period.

All connected cables must be laid in such a way that they cannot be crushed by objects and that nobody can step on them! Replace damaged cables immediately and do not use them!

Use only accessory parts specified by Voice-Acoustic or original accessory parts from Voice-Acoustic. Check all cabinets and accessories regularly for wear and replace them if necessary.

Do not set up the loudspeakers in places where they are permanently exposed to moisture, dust, dirt or direct sunlight.

Care
Wipe the surface of loudspeakers only with a damp cloth and pure water. In case of heavy pollution, repeat the above procedure several times if necessary. Do not use any chemical additives or aggressive detergents, as these may harm and damage the surfaces.

Transport and storage
When transporting and storing the unit, it is important to ensure that the surface and front grill of the loudspeaker are not damaged. Moisture can penetrate through exposed wood surfaces and cause the wood to swell. A bent or broken front grill will no longer adequately protect the sensitive speaker membranes. In addition, appreciable dust deposits may considerably impair the functionality of a loudspeaker membrane. For this reason, the loudspeakers should be transported and stored in a safe, careful, dry and largely dust-free manner.

The following accessory parts for transport and storage are available from Voice-Acoustic:

- Carrying bag for up to 2 x LA-Stick 4x4 or 1 x LA-Stick 8x4 (Art.-Nr. 500442000)
- Heavy duty flightcase for up to 4 x LA-Stick 4x4 or 2 x LA-Stick 8x4 (Art.-Nr. 500443000)

Note: *The original packaging is unsuitable as permanent storage and transport packaging!*

Warranty
The warranty period is 24 months from date of delivery.

On our choice we will eliminate any lack of conformity with repair or with replacement of the faulty goods. The place of performance for warranty services is Voice-Acoustic headquarters in Dörverden. In case of remedy of defects, the buyer shall bear all costs resulting from transportation of the goods to Voice-Acoustic headquarters in Dörverden.

The ordering party is not entitled to remedy the defect by itself or to organise a replacement and to charge such activities to Voice-Acoustic. In case of self remedy by the ordering party the warranty given by Voice-Acoustic becomes void.

Warranty doesn't apply to parts of wear and tear, such as threaded points, locking bolts, ball locking bolts and the SpeakON® connectors.

Introduction

Components

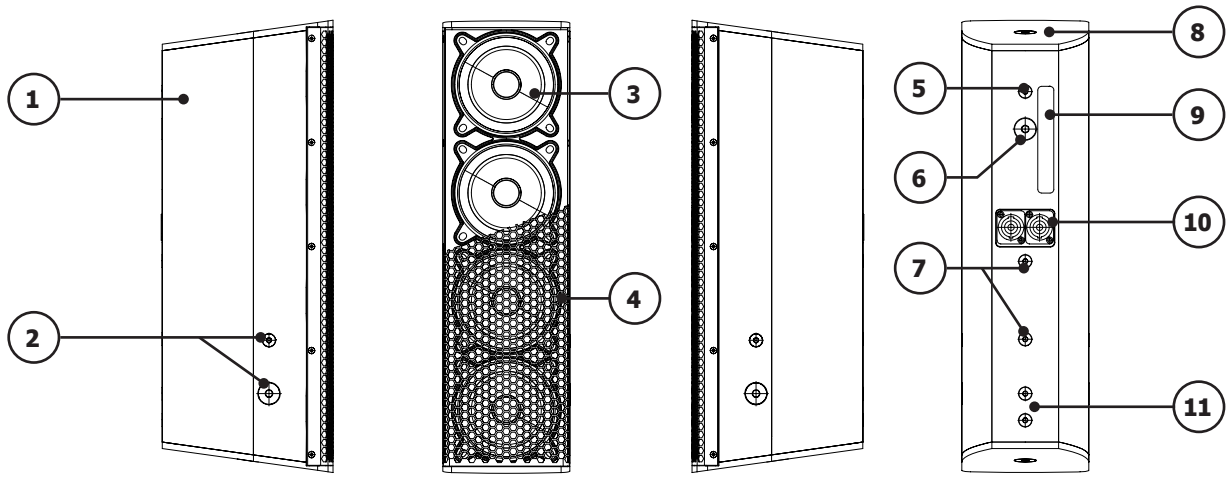

1. 15 and 12 mm multiplex cabinet, Warnex textured paint finish
2. M6 and M10 threaded points on both sides for mounting the U-bracket
3. 4“ Neodym wideband transducer
4. Front grille 1 mm with 5 mm acoustic foam
5. M6 threaded point
6. M10 threaded point for mounting the spindle and flight mechanics, or a truss clamp
7. M6 threaded points for mounting the stand adapter, or a wall or ceiling bracket
8. M10 threaded points on top and bottom of housing
9. Type plate with serial number
10. Connector panel with two SpeakON® connectors
11. M6 threaded points for mounting the spindle mechanics

Introduction

Technical data

LA-Stick 4x4

Components	4 x 4“ Neodym wideband transducer with 0,75“ voice coil
Frequency response	161 Hz - 18 kHz (- 10 dB) 210 Hz - 15,4 kHz (+/- 3 dB)
Coverage range (h x v)	70° x 25° (vertical directivity is controlled by the angle between elements)
Powerhandling	120 W AES / 240 W programm / 480 W peak at 16 Ω
Sound pressure	116 dB SPL AES / 119 dB SPL program / 122 dB SPL peak
Dimensions / Weight	419 (h) x 119 (w) x 160 mm (d) / 3,2 kg

LA-Stick 8x4

Components	8 x 4“ Neodym wideband transducer with 0,75“ voice coil
Frequency response	150 Hz - 19 kHz (- 10 dB) 200 Hz - 17 kHz (+/- 3 dB)
Coverage range (h x v)	70° x 18°
Powerhandling	240 W AES / 480 W programm / 960 W peak at 8 Ω
Sound pressure	122 dB SPL AES / 125 dB SPL program / 128 dB SPL peak
Dimensions / Weight	830 (h) x 119 (w) x 160 mm (d) / 6,2 kg

LA-Stick 12x4

Components	12 x 4“ Neodym wideband transducer with 0,75“ voice coil
Frequency response	140 Hz - 18 kHz (- 10 dB) 185 Hz - 16 kHz (+/- 3 dB)
Coverage range (h x v)	70° x 14°
Powerhandling	360 W AES / 720 W programm / 1.440 W peak at 5,3 Ω
Sound pressure	126 dB SPL AES / 129 dB SPL program / 132 dB SPL peak
Dimensions / Weight	1.236 (h) x 119 (w) x 160 mm (d) / 9,2 kg

Connections

The speaker has two loop-through Neutrik NL4 SpeakON® IN/OUT connectors. They use the 1+/1- connection pins. Additional loudspeakers can be looped through via the second connector.

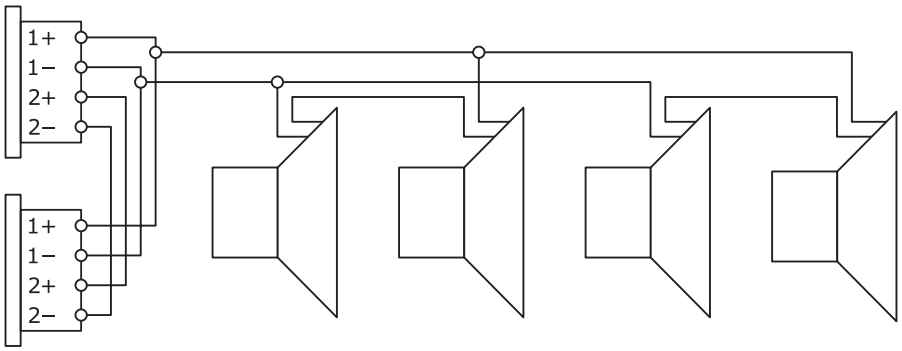

Introduction

Setup
The LA-Stick is designed for vertical operation. A variety of accessories is available from Voice-Acoustic to securely attach the loudspeaker safely on tripods, distance rods or hanging it from on trusses, ceilings and walls. Ensure that the loudspeakers are securely attached to prevent personal injury and damage of property.

Connecting cables
When connecting the cables to the loudspeaker, ensure that the polarity (+/-) and pin assignment (1/2) is correct. Incorrect connection results in a significant change in the loudspeaker sound characteristics and may damage the compression driver.

The two connection sockets on the back of the loudspeaker can be used to link multiple loudspeakers on a single amplifier. Note that parallel connection reduces the total impedance (Ω) seen by the amplifier. The total impedance of loudspeakers connected in parallel must not drop below the minimum operating impedance of the amplifier.

Voice-Acoustic recommends to use the available 4 x 4 mm² Speakon cables for mobile use.

We recommend wiring the basses with at least 4 mm² in installations. The cables of the tops in installations must be sufficiently dimensioned according to impedance, power and cable length.

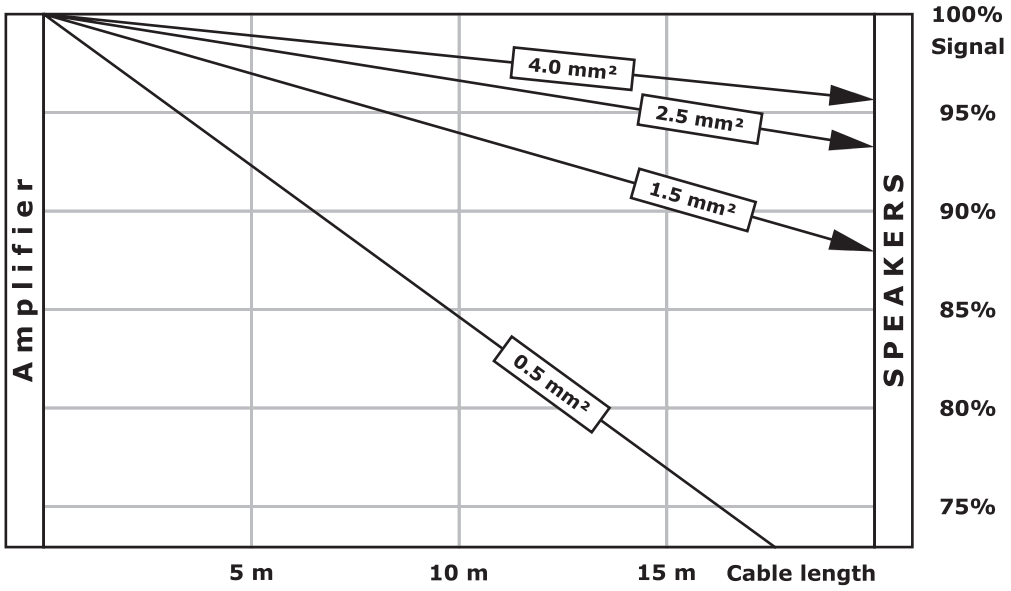

Simplified display without consideration of loudspeaker impedances

Operation
The LA-Stick is exclusively intended for operation with Voice-Acoustic system electronics with internal DSP controller: the HDSP power amplifiers or powered by the free 800 W amplifier channels of the self-powered subwoofers.

Make sure the appropriate preset has been selected before connecting the speaker to the system power amp or self-powered sub-woofer.

Using the wrong preset can damage parts of the loudspeaker.

Note: *If the LA-Stick is not operated on the intended Voice-Acoustic system electronics, the manufacturer's warranty for the loudspeaker expires!*

Working with LA-Stick

Adjustment of the high frequency range to the array length
In the self-powered subwoofers, two different configurations are always available as presets for the LA-Stick 4x4. The settings differ only in the gain value of a high shelf filter (+3.00 dB or +5.00 dB) for adjusting the high frequency range to the array length.

With increasing array length, the gain must be increased further.

Preset name: **2x LA4x4 XxxXXX** (e.g. **2x LA4x4 Pav112**) with one LA-Stick 4x4 per side:

High Shelf filter: Mid-band frequency 3.99 kHz, Quality 10.0 and Gain: 3.00 dB.

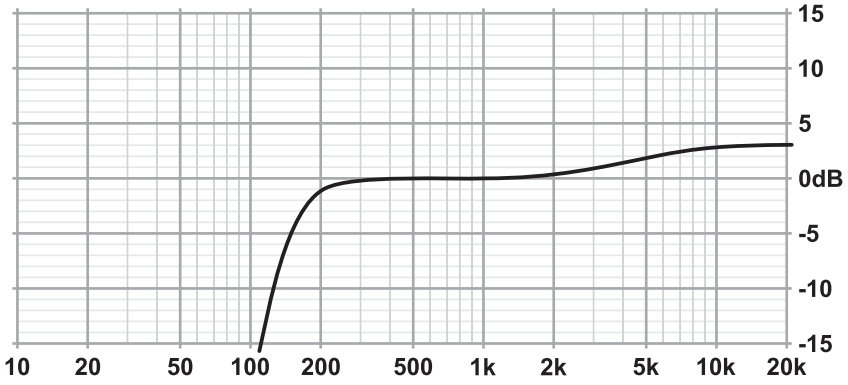

Type	Freq	Q	Gain
High Shelf	3.99 kHz	10.0	3.00

Preset name: **4x LA4x4 XxxXXX** (e.g. **4x LA4x4 Pav112**) with two LA-Sticks 4x4 per side.

High Shelf filter: Mid-band frequency 3.99 kHz, Quality 10.0 and Gain: 5.00 dB.

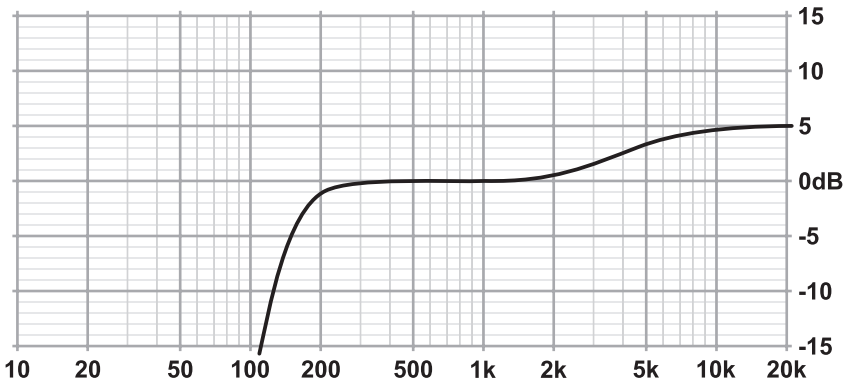

Type	Freq	Q	Gain
High Shelf	3.99 kHz	10.0	5.00

For the operation of three or four LA-Sticks 4x4 on top of each other per side, no standard setting can be set, since the increase of the High-Shelf filter depends on the array length and the angle of inclination of the individual elements to each other. The increase of the High-Shelf filter must therefore be measured or adjusted by ear when operating three or four LA-Sticks 4x4 one above the other.

To keep the number of presets and speaker combinations in the HDSP amplifiers manageable, only presets for the operation of two LA-Sticks 4x4 per side with corresponding subwoofers are included.

4x LA4x4 XxxXXX (e.g. **4x LA4x4 Pav112**).

If only one LA-Stick 4x4 per side is to be used with an HDSP amplifier, the High-Shelf filter of the preset must be lowered accordingly from +5.00 dB to +3.00 dB in Gain!

Working with LA-Stick

Positioning LA-Stick 8x4 and LA-Stick 12x4

When setting up or installing the LA-Stick loudspeakers, make sure that the vertical narrow dispersion angle covers the entire listening area.

In contrast to conventional, vertically wide radiating loudspeakers, the LA-Stick 8x4 and LA-Stick 12x4 should not be used too high and too inclined.

Otherwise, homogeneous sound coverage of the audience area is not possible and the vertically narrow radiation angle covers only a relatively small area.

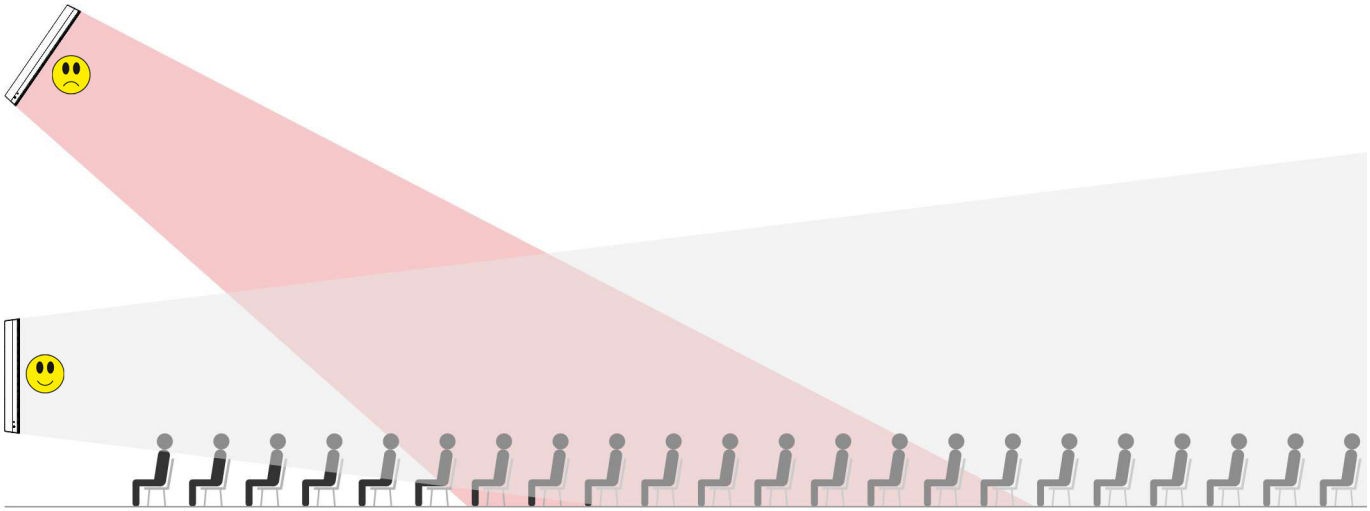

Working with LA-Stick

Mounting the spindle mechanics

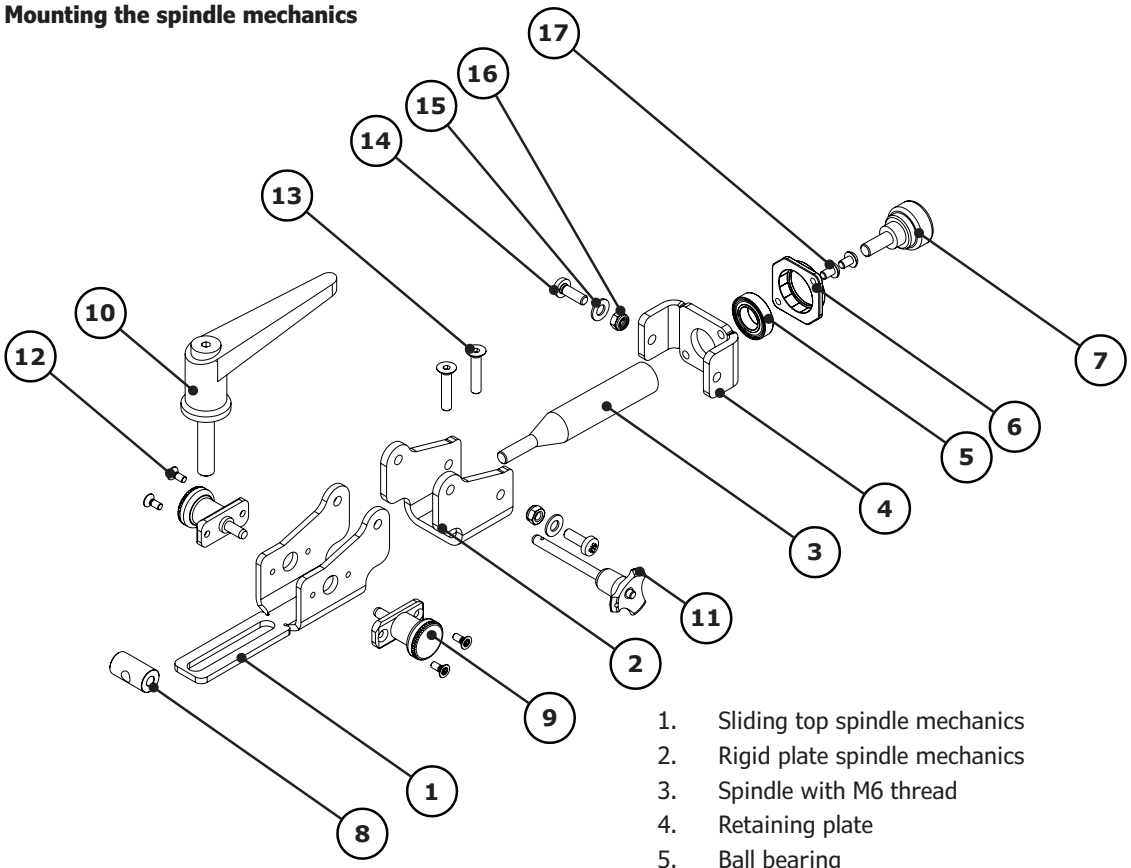

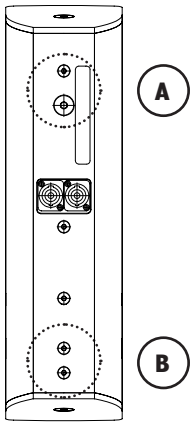

1. Sliding top spindle mechanics
2. Rigid plate spindle mechanics
3. Spindle with M6 thread
4. Retaining plate
5. Ball bearing
6. Ball bearing housing
7. Rotary knob with M6 threaded bolt
8. Locking pin holder with M6 internal thread
9. Locking pin with mounting flange
10. M10 clamping lever with axial bearing
11. Ball locking pin
12. Countersunk screw M4 x 5 mm
13. Countersunk screw with hexagon socket M6 x 30 mm
14. Socket head screw M6 x 20 mm
15. 6 mm washer
16. Self-locking nut M6
17. M5 x 8 mm pan-head screw with hexagon socket

To mount the angle mechanism on the back of the LA-Stick, the spindle (3) with locking pin holder (8) must be released from the rotary knob (7). Hold the knob with one hand and turn the spindle out. Now you can screw the rigid plate (2) onto the back of the LA-Stick (B) with two M6 x 30 mm screws (13). The two screws are located on the back of the LA-Stick.

After you have mounted the rigid plate (2) on the back of the LA-Stick, screw the spindle (3) and the rotary knob (7) together again. You can now connect the sliding plate (1) and fixed plate (2) with the locking pin (9), the locking pin holder (8) and the ball locking pin (11). Make sure that the ball locking pin is correctly inserted and that both locking pins are engaged.

Use the M10 clamping lever (10) to fix the sliding plate (1) to the bottom LA-Stick. To do this, remove the M10 x 25 mm hexagon socket screw on the back of the LA-Stick (A).

Separation of two LA-Stick

Loosen the M10 clamping lever (10) slightly and unlock the two locking bolts (9). Now remove the ball lock pin (11) and pull the LA-Sticks apart. After the LA-Sticks have been disconnected, tighten the M10 clamping lever (10) again firmly so that no whistling noises occur at the M10 thread point.

Working with LA-Stick

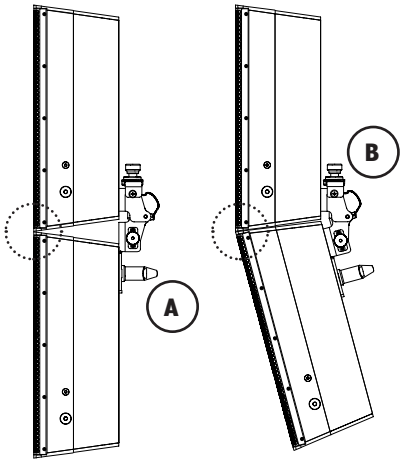

Forming a Array

When mounting several LA sticks one below the other, please note that for optimum coupling, the front edges of the box are always tightly joined, regardless of whether you are working with the spindle mechanics or the tilt adapters.

Adjust the angle with the spindle mechanics

1. Loosen the screw lever (A) on the bottom LA-Stick.
2. Turn the rotary knob (B) of the spindle mechanics on the top LA-Stick until you have set the angle.
3. Push the LA-Sticks together at the front.
4. Tighten the screw lever (A) again.
5. Turn the rotary knob (B) a little bit so that some tension is applied to the connection and nothing rattles.

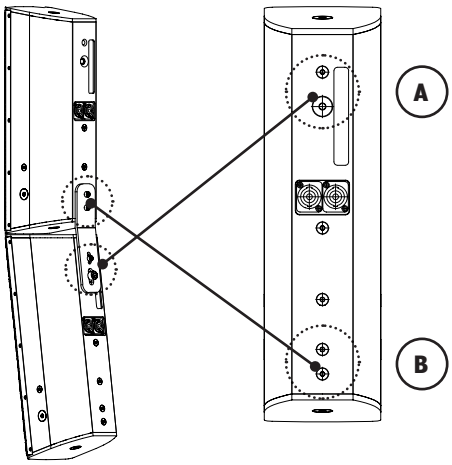

Mounting the tilt adapter

There are three types with fixed angles of 0°, 4° and 8°.

1. Remove the two M6 countersunk screws (B) in the top LA-Stick and mount the tilt adapter firmly to the LA-Stick.
2. Remove the M6 and M10 countersunk screws (A) in the lower one and mount the tilt adapter in the two slotted holes using two cylinder head screws with washers. Use M10 and M6 x 30 - 50 mm screws.
3. Before you tighten the cylinder head screws (A), push both LA-Sticks together so that the box edges are tightly joined at the front for optimum coupling.
4. Tighten the cylinder head screws (A).

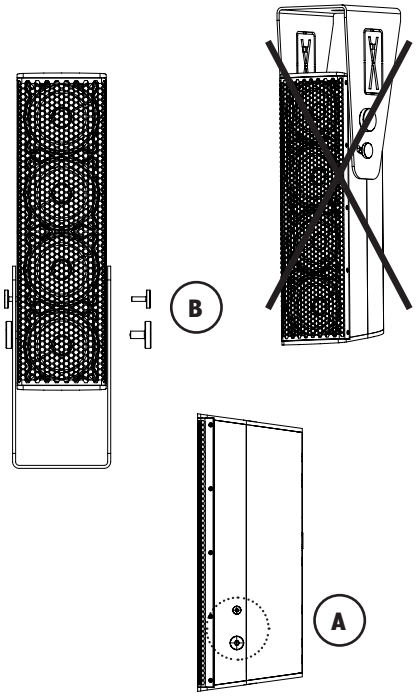

Mounting the U-bracket

With the U-bracket, up to four LA-Stick 4x4 or two 8x4 can be used one above the other, if it is fastened accordingly.

1. Remove the M10 and M6 countersunk screws (A) on both sides of the LA-Stick.
2. Use the supplied M10 and M6 knurled screws (B) including plastic washers to mount the U-bracket.
3. To protect the coatings, insert the plastic washers between the knurled screw, U-bracket and LA-Stick.

Note: *The U-bracket is only intended for vertical mounting, it is not suitable as a ceiling bracket, as the grid is not intended for angling in this position!*

Working with LA-Stick

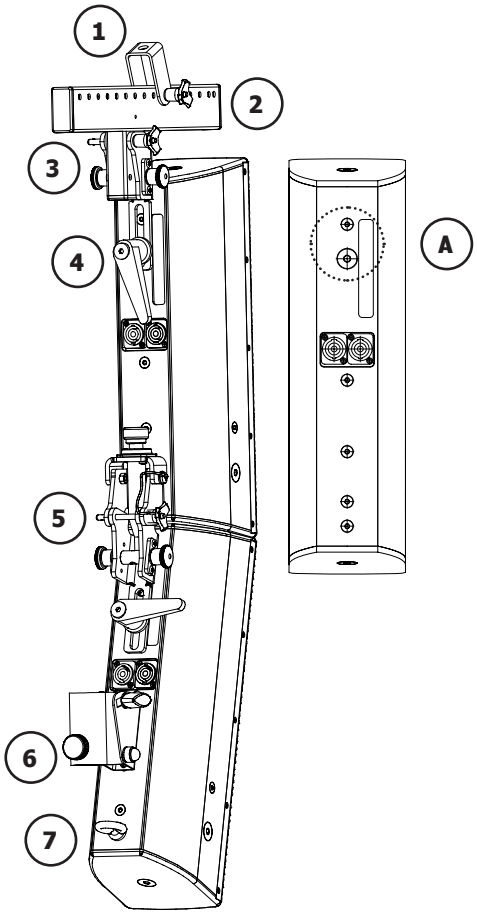

LA-Stick 4x4 in flight operation

Using flight mechanics, up to four LA Stick 4x4 or two 8x4 can be flown under each other on ceilings and trusses. The LA-Stick 12x4 can be supplemented by an LA-Stick 4x4.

Assembly and alignment of the flight mechanics

1. Use the M10 clamping lever (4) to attach the flight mechanic to the LA-Stick. To do this, first remove the M10 x 25 mm hexagon socket screw on the back of the LA-Stick (A).
2. Connect the two parts of the flight mechanics with each other with the aid of the locking pins and the ball locking pin (3).
3. The small U-bracket (1) can be mounted directly on the ceiling, or e.g. on the universal suspension device for flight mechanics or the self lock clamp.
4. Align the flight mechanics by fixing the U-bracket on the upper hole rail (2) with the ball locking pin. How the center of gravity behaves depends on the number of LA-Sticks attached to the flight mechanics.

Safety points in flight operations

1. You can use any free M6 threaded point on the back for an M6 x 30 mm (7) eyelet.
2. If several LA-Sticks are connected to each other with the spindle mechanics, you can pass the safety catch rope under the ball locking pin (5) and attach it to the safety point of the bottom LA-Stick (7). The top LA-Stick is then secured.
3. Users who frequently switch between tripod and flight operation can also use the tiltable stand adapter (6) as a safety point with the aid of a 6 mm chain link after you have carried out the safety catch rope under the ball locking pin (5).

Note: *The M10 threaded points at the top and bottom of the housing must not be used as securing points. In case of overstress, the bottom or cover of the housing may break off!*

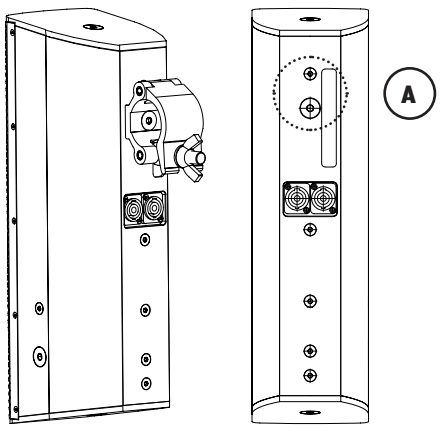

Flight operation at truss clamp

max. load: Four LA-Stick 4x4, two 8x4 with spindle mechanics, or one LA-Stick 12x4.

1. Remove the M10 countersunk screw (A) and mount the crosshead clamp. The clamp should be provided for countersunk screws so that the crosshead clamp can be tightened firmly in the desired position.

We recommend it:

- Ultralite Half Coupler M10, black, Code: KCP-831B
- Ultralite Half Coupler M10, silver, Code: KCP-831

Working with LA-Stick

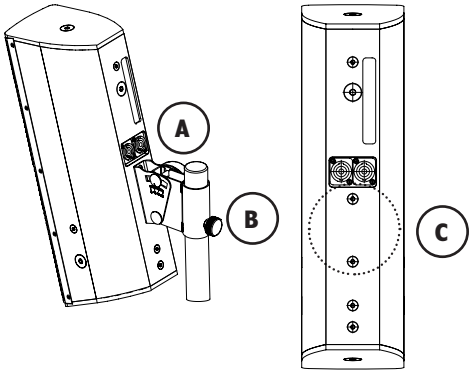

Mounting the tiltable stand adapter

max. load: Two LA-Stick 4x4 with spindle mechanics or only one LA-Stick 8x4, LA-Stick 12x4 per time.

1. Remove the two M6 countersunk screws (C) and mount the adapter firmly to the LA-Stick.
2. Tighten clamping screw (B) to secure the position of the adapter on the stand or spacer rod. We recommend: Tripods or rods with „Ring Lock“.
3. To adjust the inclination of the adapter, loosen the wing nut (A) and then tighten it again.

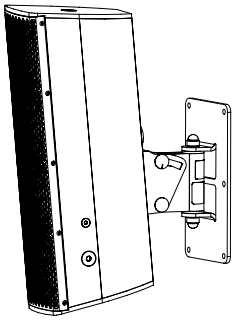

Mounting the tilting and swivelling wall bracket

max. load: Four LA-Stick 4x4, two 8x4 with spindle mechanics, or one LA-Stick 12x4.

1. When mounting the wall bracket to the wall, follow the manufacturer‘s operating instructions.
2. Remove the two M6 countersunk screws (C) and attach the swivel bracket of the wall bracket firmly to the LA-Stick.
3. Hang the swivel bracket (with mounted loudspeaker) into the wall bracket.
4. Screw parts together using the lower carriage bolt, washer and lock nut. Adjust the inclination on the scale and retighten the upper screw connection.

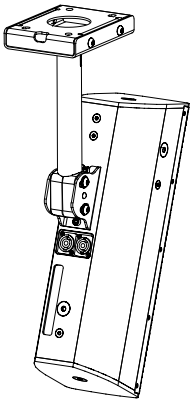

Mounting the ceiling bracket

max. load: Four LA-Stick 4x4, two 8x4 with spindle mechanics, or one LA-Stick 12x4.

1. When mounting the ceiling plate of the bracket to ceilings, follow the manufacturer‘s operating instructions.
2. Remove the two M6 countersunk screws (C).
3. Fix the ceiling bracket to the LA-Stick with two M6 hexagon socket head screws and washers.
4. Attach ceiling bracket with LA-Stick to the ceiling panel and set the desired inclination and direction.

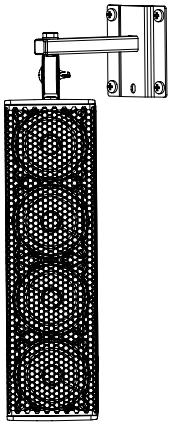

Mounting the wall bracket

max. load: Only one LA-Stick 4x4. If overloaded, the housing cover may break off!

1. When mounting the wall bracket to the wall, follow the manufacturer‘s operating instructions.
2. Remove the M10 countersunk screw on the top of the LA-Stick and mount the rotary and swivel axis there.
3. Attach the rotary and swivel axis to the wall bracket with LA-Stick and set the desired inclination and direction.

Working with LA-Stick

Overview Accessories



U-Bracket for LA-Stick (Art.-Nr. 400441001)
U-Bracket for LA-Stick, white with stainless steel knurled screws (Art.-Nr. 400441002)
U-Bracket for LA-Stick, special color with stainless steel knurled screws (Art.-Nr. 400441009)



Spindle mechanics for LA-Stick (Art.-Nr. 400443001)



Tiltable stand adapter, 30° tiltable for LA-Stick (Art.-Nr. 999919780)



0° Tilt adapter as an alternative to spindle mechanics (Art.-Nr. 400445001)
4° Tilt adapter as an alternative to spindle mechanics (Art.-Nr. 400445041)
8° Tilt adapter as an alternative to spindle mechanics (Art.-Nr. 400445081)



Truss clamp for pipe 48-51mm, max. 100 kg (Art.-Nr. 999981201)



Flight mechanics for LA-Stick (Art.-Nr. 400444001)



Wall bracket for hanging on the M10 thread of the upper side of the housing (Art.-Nr. 999908131)



Carrying bag for up to 2 x LA-Stick 4x4 or 1 x LA-Stick 8x4 (Art.-Nr. 500442000)



Heavy-Duty Flightcase für bis zu 4 x LA-Stick 4x4 or 2 x LA-Stick 8x4 (Art.-Nr. 500443000)



Universal suspension arrangement for flight mechanics (Art.-Nr. 409992001)



Wall mount with extension (Art.-Nr. 409992031)



Speaker ceiling mount (Art.-Nr. 999924496)
Speaker ceiling mount, white (Art.-Nr. 999224496)



Wall bracket, slewable and 30° tiltable (Art.-Nr. 999924481)
Wall bracket, slewable and 30° tiltable, white (Art.-Nr. 999224481)



Safety 6/1000 mm (Art.-Nr. 999963100)

Manufacturer‘s declaration

Imprint
© SRV Licht- & Tonanlagen, all rights reserved.

All specifications in this manual are based on information available at the time of publishing for the features and safety guidelines of the described products. Technical specifications, measurements, weights and properties are not guaranteed.

The manufacturer reserves the right to make technical modifications according to legal regulations stipulating the continual improvement of product features. For the safe operation of the unit, this manual and all other required information must be available to all users at the time of assembly and disassembly of the unit, and during operation. Assemble or operate the unit only after reading and understanding this manual, and keeping it at hand at all times at the site.

We are happy to receive your suggestions and proposals for the enhancement of this manual.

Please send us your ideas to the following address:

SRV Licht- & Tonanlagen - Voice-Acoustic Headquarters
Brocksfeld 3
D-27313 Dörverden

Tel.: + 49 (0) 4234 942 777
E-Mail: info@voice-acoustic.de

Version 2026-11 EN